REVISIONS				
ZONE	REV	DESCRIPTION	DATE	APPROVED

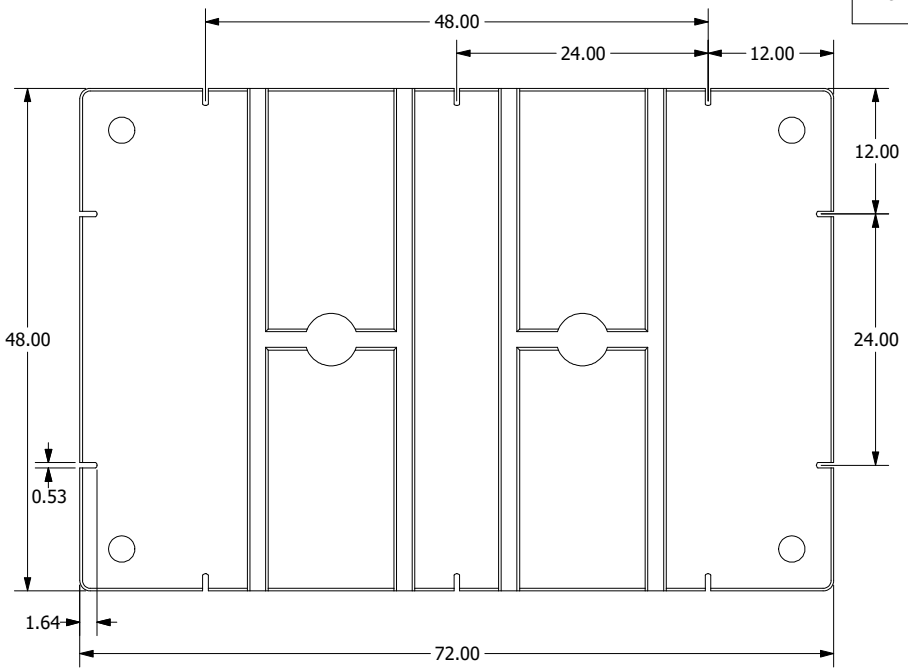

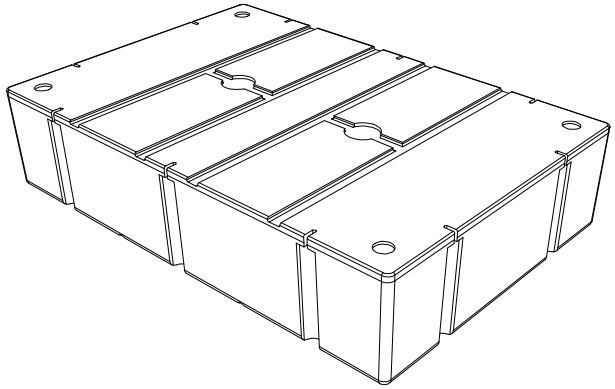

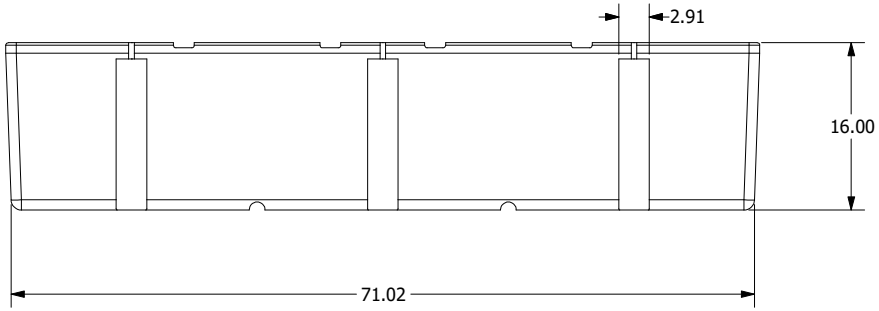

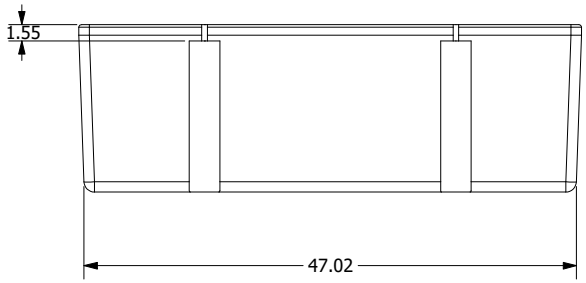

SPECIFICIATIONS	DRAWN	DATE
MATERIAL: POLYETHYLENE TOTAL WEIGHT: 82 LBS	GHB	1/31/20
	CHECKED	
	QA	
	MFG	
	APPROVED	

DPI

4 X 6 X 16 FLOAT

SIZE	FSCM NO.	DWG NO.	REV
A			

SCALE		SHEET
N/A		1 OF 1